REV.	ECN NO.	DESCRIPTION	DRAW	APPD	DATE
A	---				

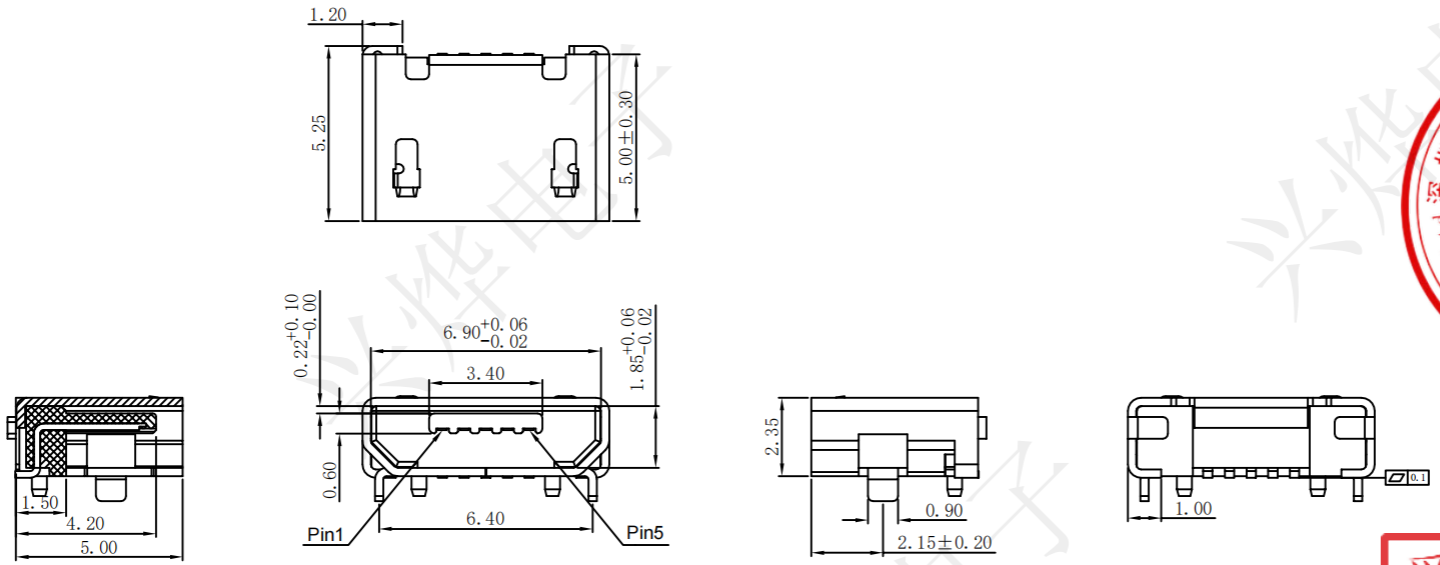

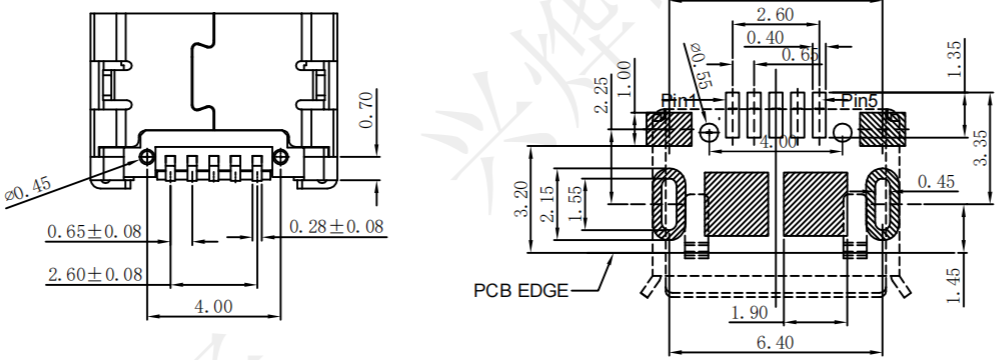

RECOMMANDED PCB LAYOUT

PCB图仅供参考

工程部专用章 APPROVED 深圳市兴烨电子有限公司 XingYe Technology Co., Ltd

受 控 文 件

Specification:
Current rating:1,5PIN 1.8A Max/2,3,4PIN 1A Max.
Dielectric withstanding voltage: 100 V(ac) for 1 min.
Contact resistance: 30 mΩ Max.
Insulation resistance: 100 MΩ Min.
Total mating force: 3.57 Kgf Max.
Total unmating force: 1.0 Kgf Min.
Temperature range: -30°C~80°C

MKF26037	MICRO-5P内插有柱6.4平口铜雾锡编带
MKF26038	MICRO-5P内插有柱6.4平口铜镀镍编带
MKF26039	MICRO-5P内插有柱6.4平口不锈钢雾锡编带
MKF26040	MICRO-5P内插有柱6.4平口不锈钢镀镍编带

3	Shell	1PCS	copper alloy/SUS304	t=0.25mm
2	Contacts	5PCS	copper alloy	t=0.20mm
1	Housing	1PCS	LCP	UL94v-0
				Remarks

深圳市兴烨电子有限公司
ShenZhen XingYe Electronics co., Ltd

TOLERANCE				
X.X	±0.30	X.°	±2°	
.XX	±0.20	.X°	±1°	
.XXX	±0.10	.XX°	±0.5°	
UNITS		mm		

APPD: 陈爱光
CHED: 施立敏
DRAW: 马洪飞

Series Name :
MICRO-5P内插有柱6.4平口编带

Product Pescription :

Part N0:

SCALE	SHEET	REV.
1:1	1/1	A1